SCANIA ICD (Individual Chassis Drawing)

ICD No	ICD-ordering date	E-mail address	Cad scale	Proj metod
1938724	2025-01-31	icd-ics.support@scania.com	1:1	
Factory order No	Chassis No	Chassis Type		
1737647-1	5775025	P 460 B6x2x4NA		

Weight Information
TOTAL : 8628 kg
FRONT : 5419 kg
REAR : 3209 kg

NOTE: Chassis is drawn and height dimensions are given at max technical axle weight. Height dimensions within brackets apply to chassis weight. Tolerance on height dimensions related to ground is +/- 25 mm. For further information see "Chassis dimensions" on Scania Truck Bodybuilder Homepage.

NOTE: This drawing has FFU-order/-s (Fit For Use) that may influence the dimensions/components. Please contact your local dealer for more information.

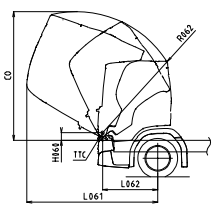

TTC = Theoretical Tilt Center
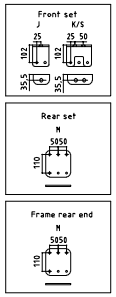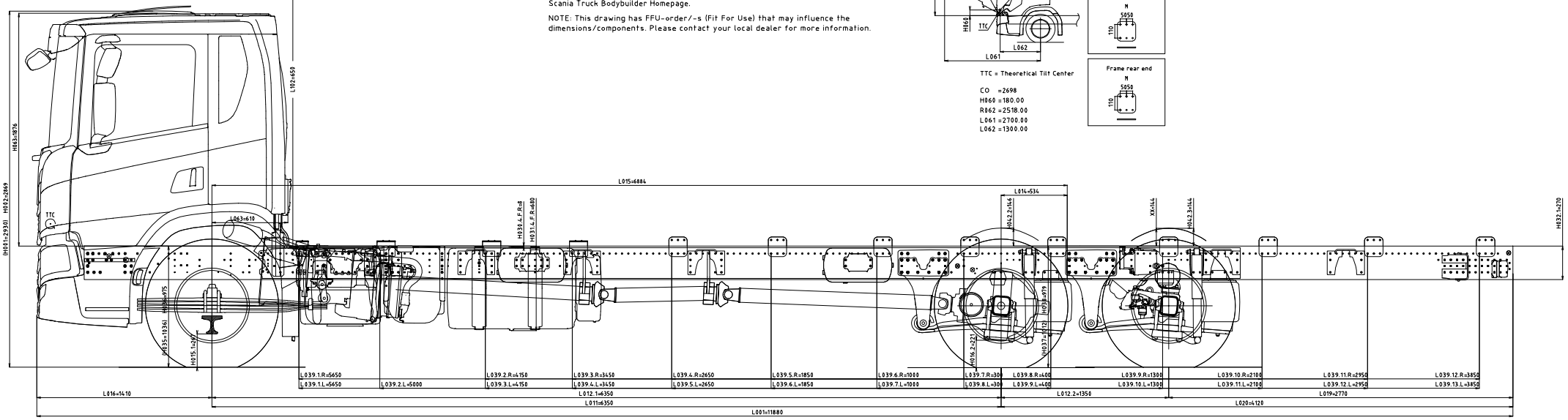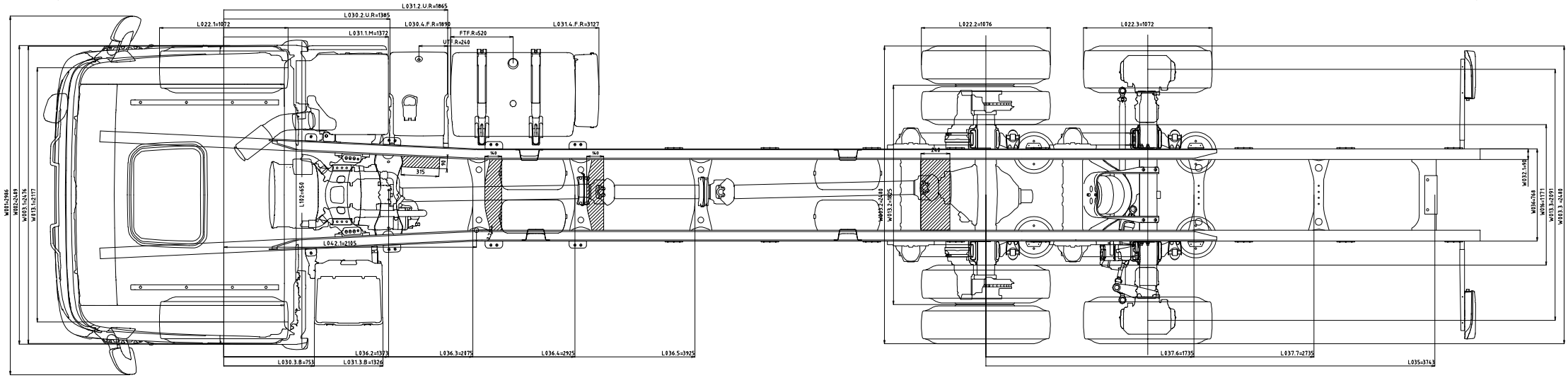
CO =2698
H060 =180.00
R062 =2518.00
L061 =2700.00
L062 =1300.00