SCANIA ICD (Individual Chassis Drawing)

ICD No	ICD-ordering date	E-mail address	Cad scale	Proj method
		icd-ics.support@scania.com	1:1	
Factory order No	Chassis No	Chassis type		
		P 320 B6x2NA		SCANIA

NOTE: Chassis is drawn and height dimensions are given at max technical axle weight. Height dimensions within brackets apply to chassis weight. Tolerance on height dimensions related to ground is +/- 25 mm. For further information see "Chassis dimensions" on Scania Truck Bodybuilder Homepage.

NOTE: This drawing has FFU-order/-s (Fit For Use) that may influence the dimensions/components. Please contact your local dealer for more information.

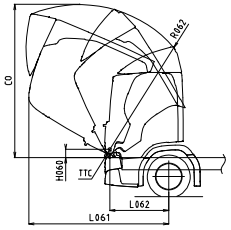

TTC = Theoretical Tilt Center

CO =3473
H060 =180.00
R062 =3293.00
L061 =2905.00
L062 =1300.00

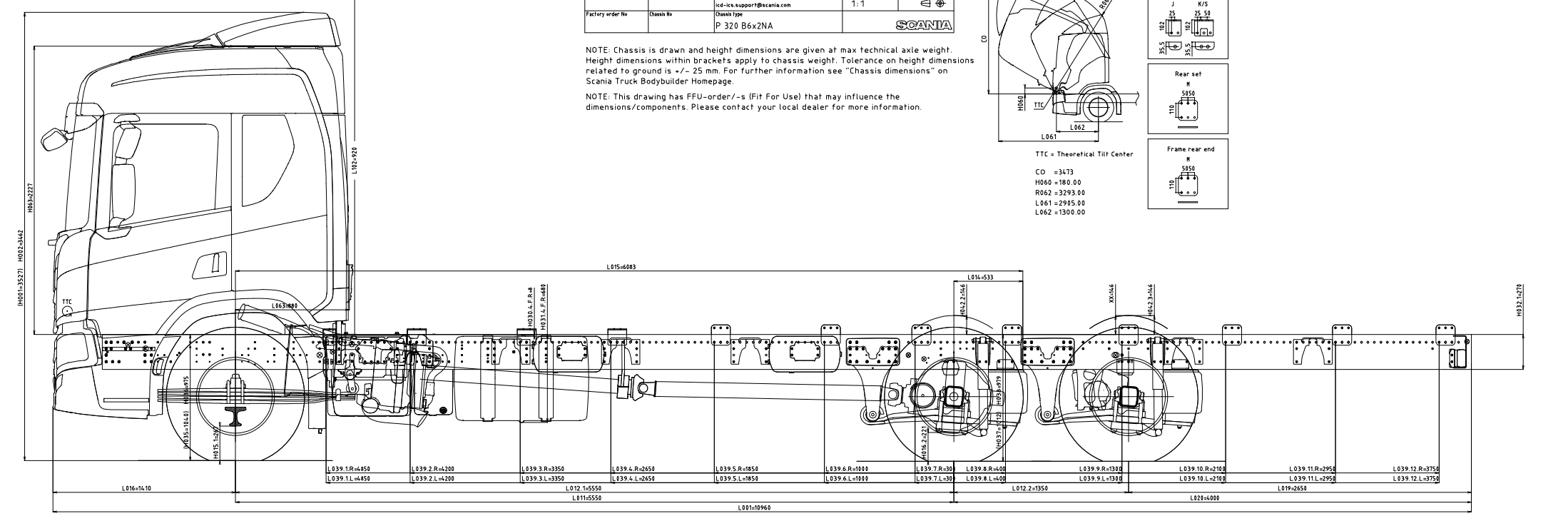

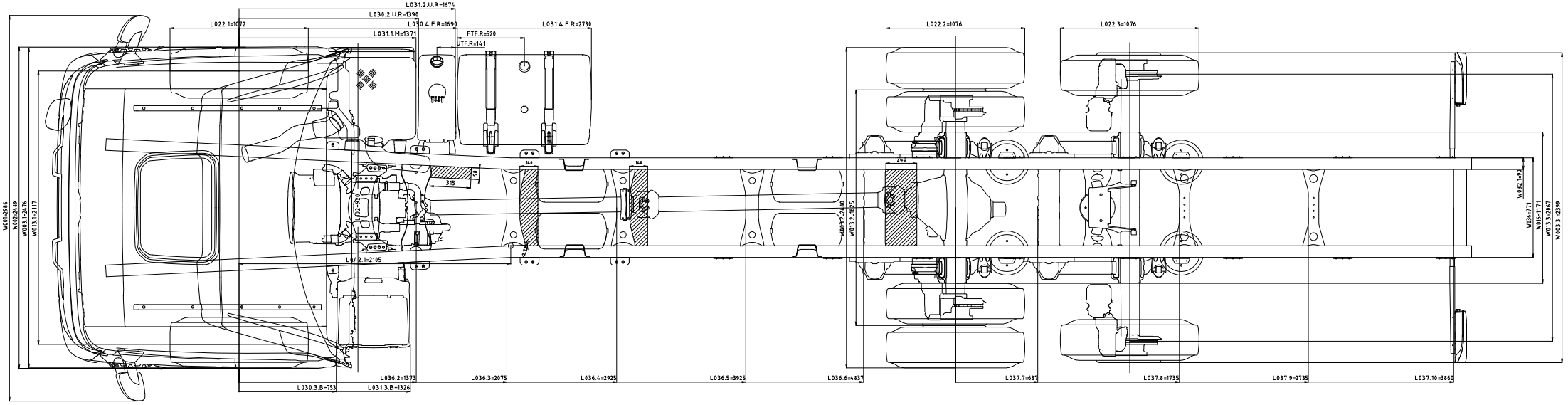

= DON'T USE THIS SPACE FOR BODYWORK